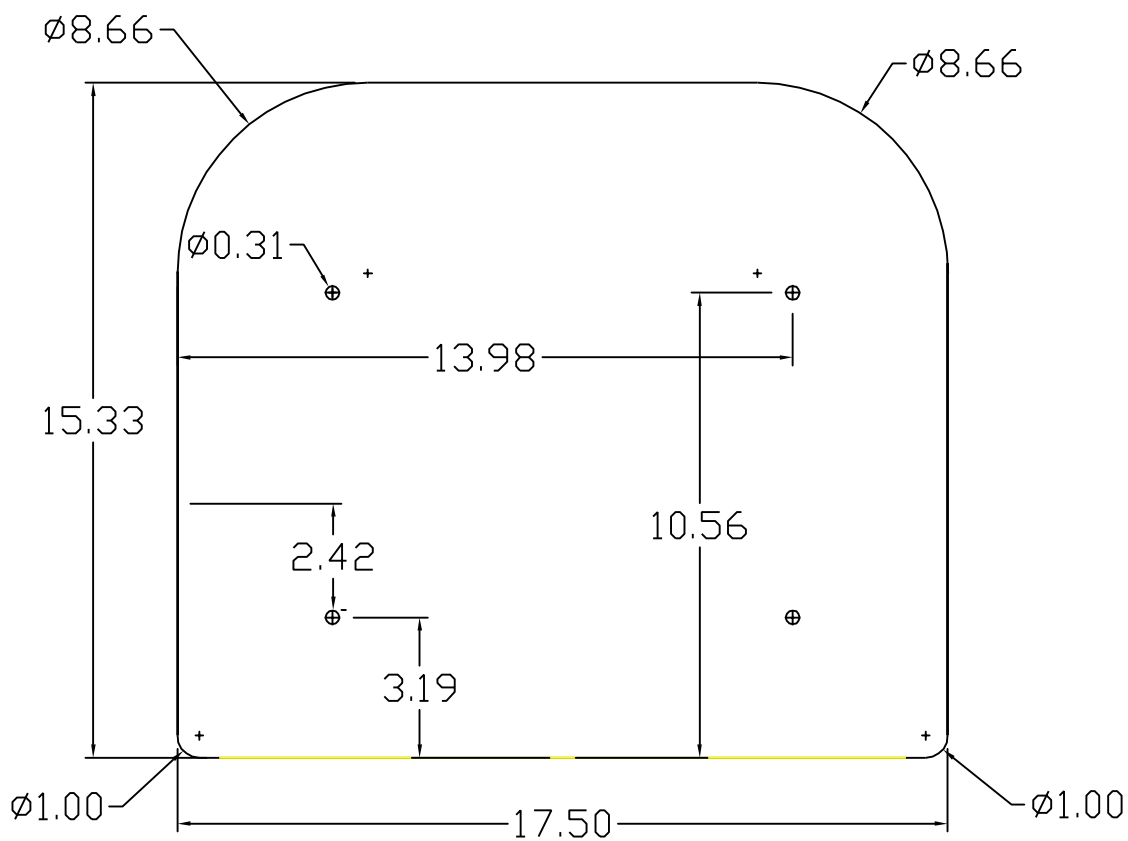

Notes:

1. *Material is good quality 1/4" Baltic birch plywood or similar material to reduce splintering on edges and surface.*
2. *Most dimensions are not critical. However, dimensions between holes should be as accurate as possible to facilitate mounting to trike frame.*
3. *Some method should be used to eliminate sharp edges on upper seat surfaces. Edge sanding, a slight 1/8", 1/16" or smaller radius or other methods may be used. Note that the upper surface (facing the viewer in the drawing above) is the surface which should be radiused at the edges. The bottom surface does not necessarily require this treatment.*

Rev.	Description	Date	By

Fox River Design

HWI Dual Offset Tube Trike (DOTT-C)
Compact Version
Seat Back Plywood Surface

Drawn by: K.L.Nikolich
Date: May 27, 2012
Scale: None
Sheet no. 1 0f 1

Drawing No. *HWI-DOTTCC-T-034*
HWI- Dual Offset Tube Trike, Version C, Compact -Trike part -Part Number 034

REV. A